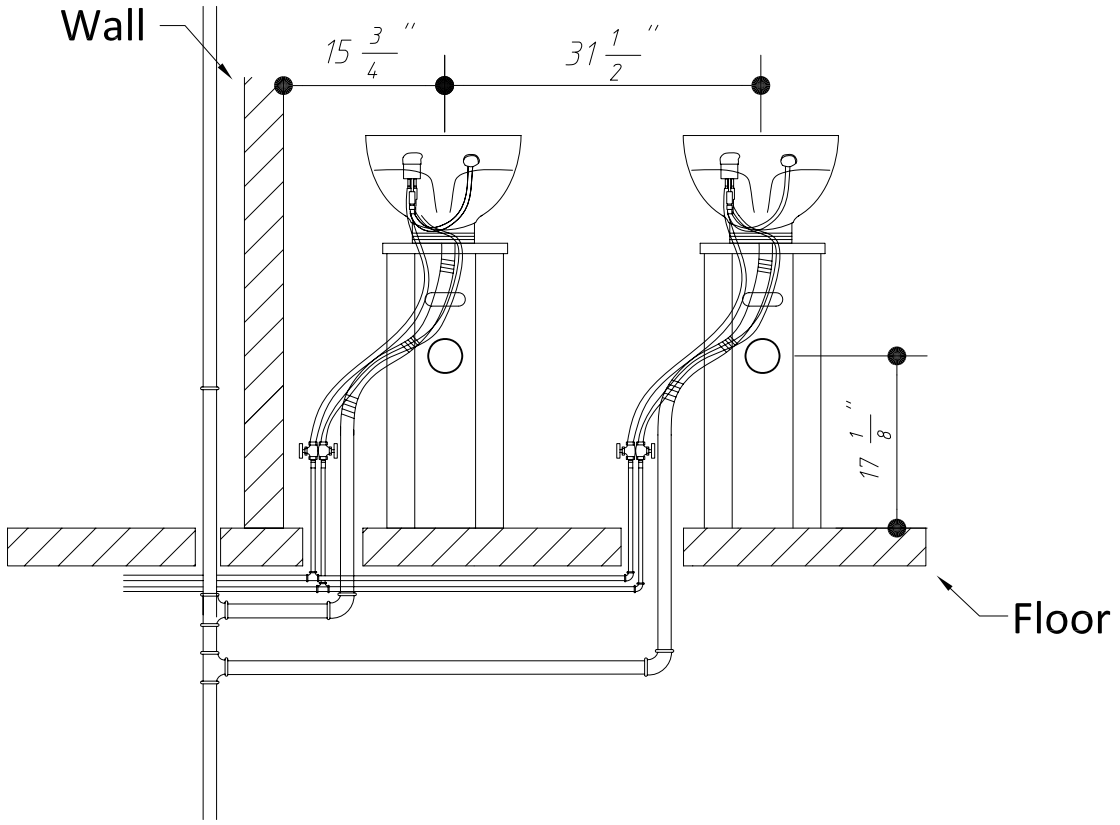
Wall
15 3/4 ''
31 1/2 ''
17 1/8 ''
Floor

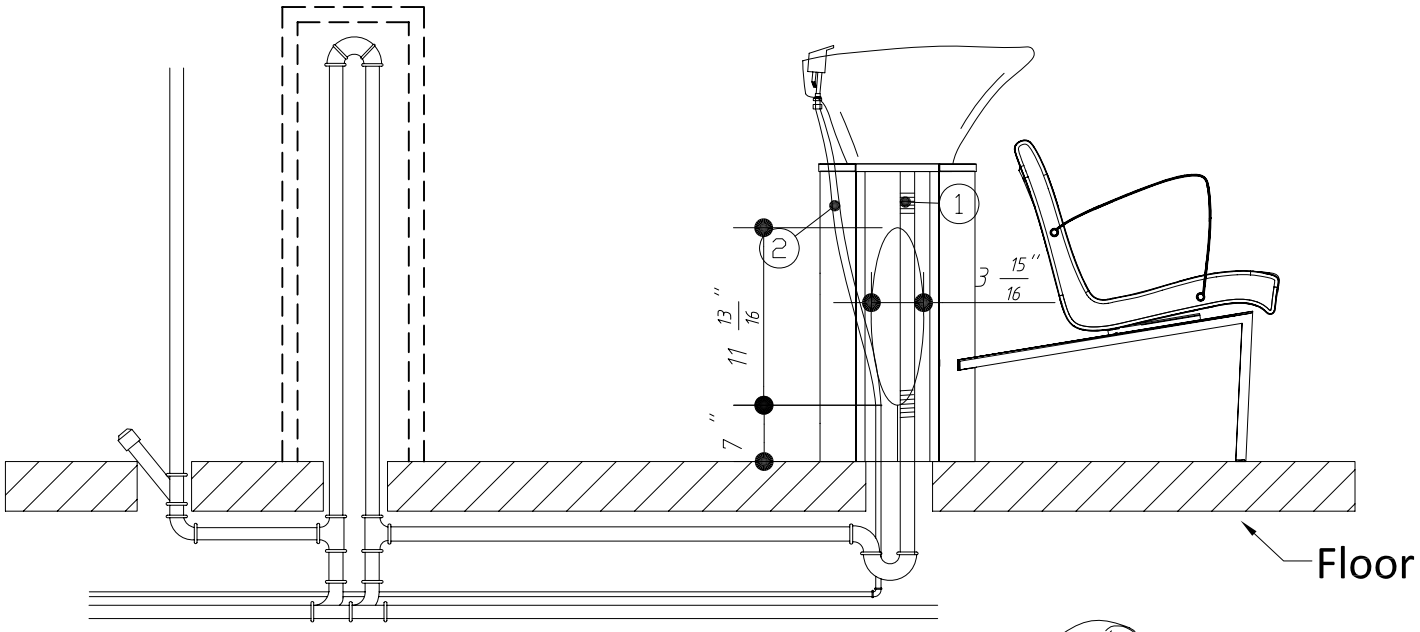
1
2
3 15/16 ''
11 13/16 ''
7 ''
Floor

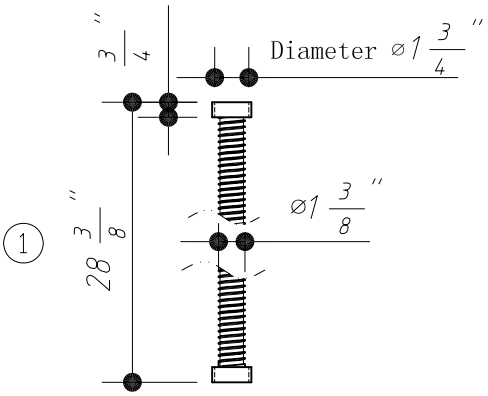
3/4 ''
Diameter ⌀1 3/4 ''
⌀1 3/8 ''
1
28 3/8 ''

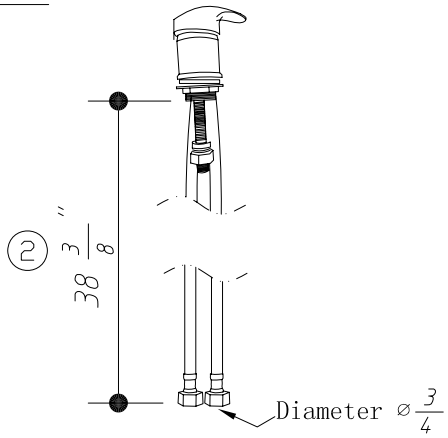
2
38 3/8 ''
Diameter ⌀3/4