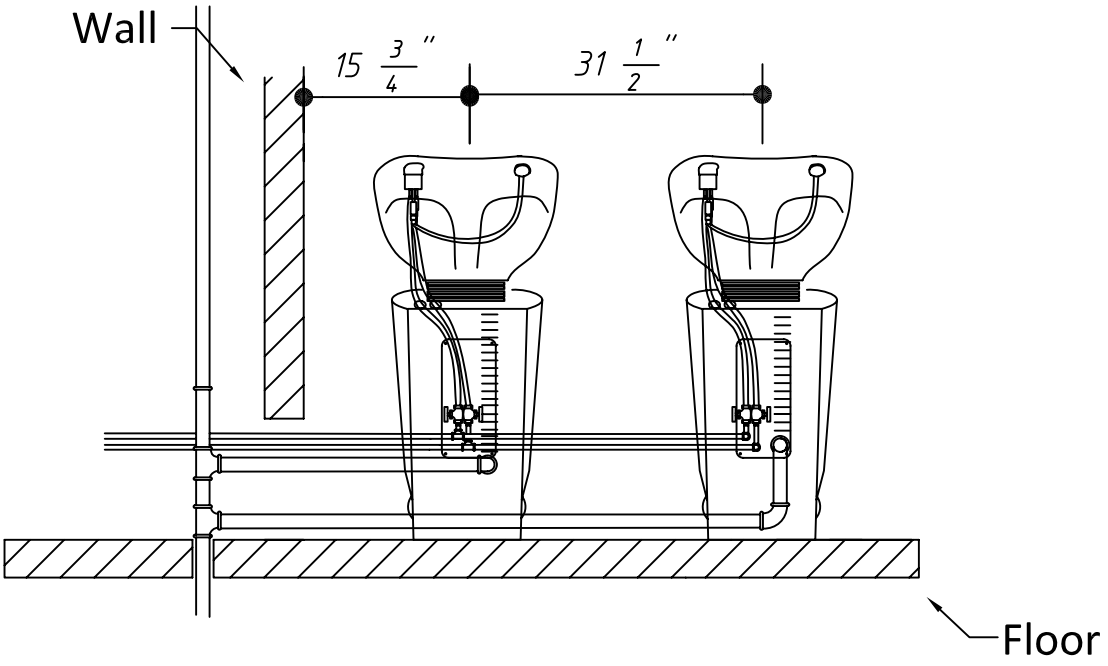

Wate pipe installation C.
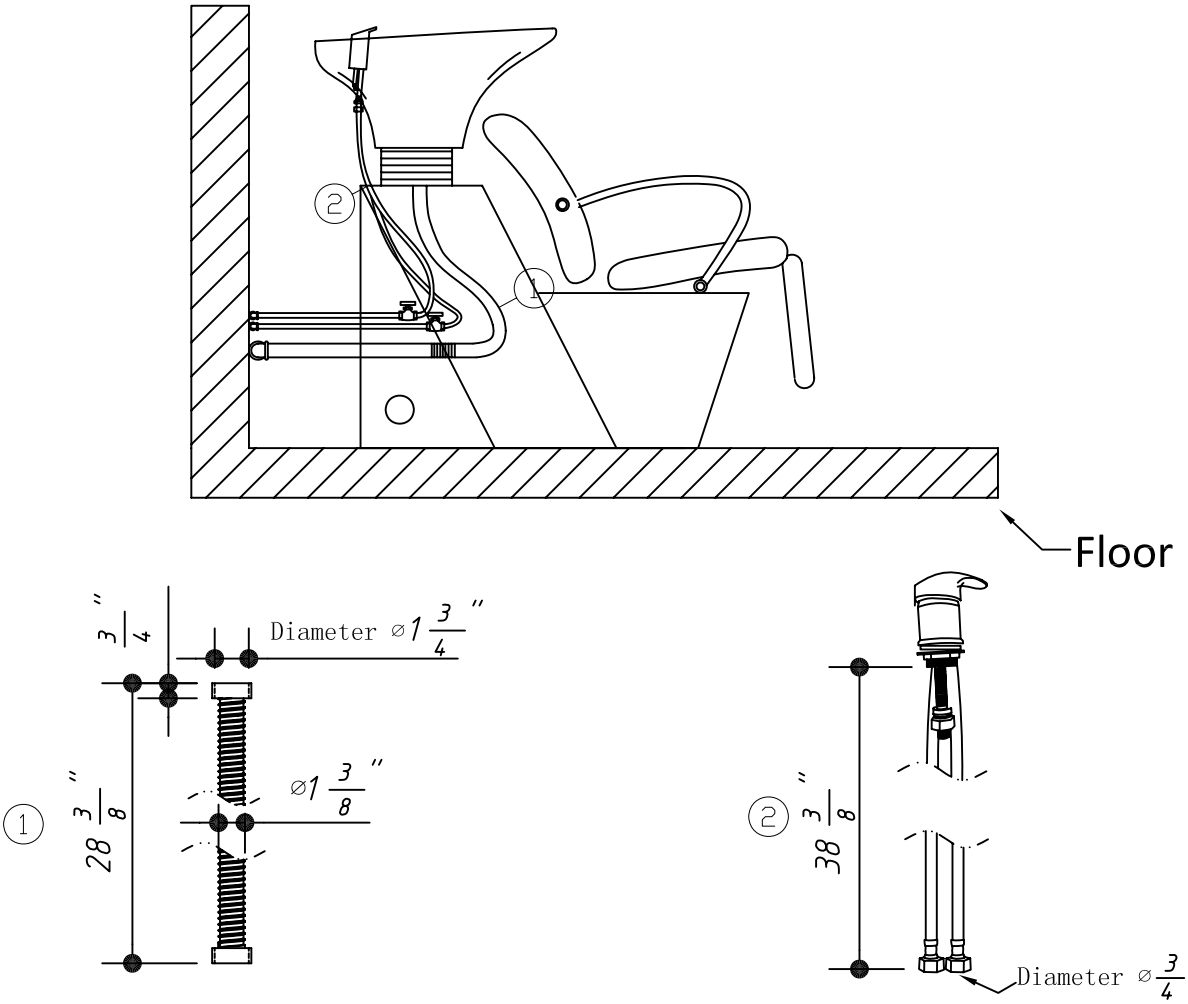
Wate pipes go out the back door of shampoo base.