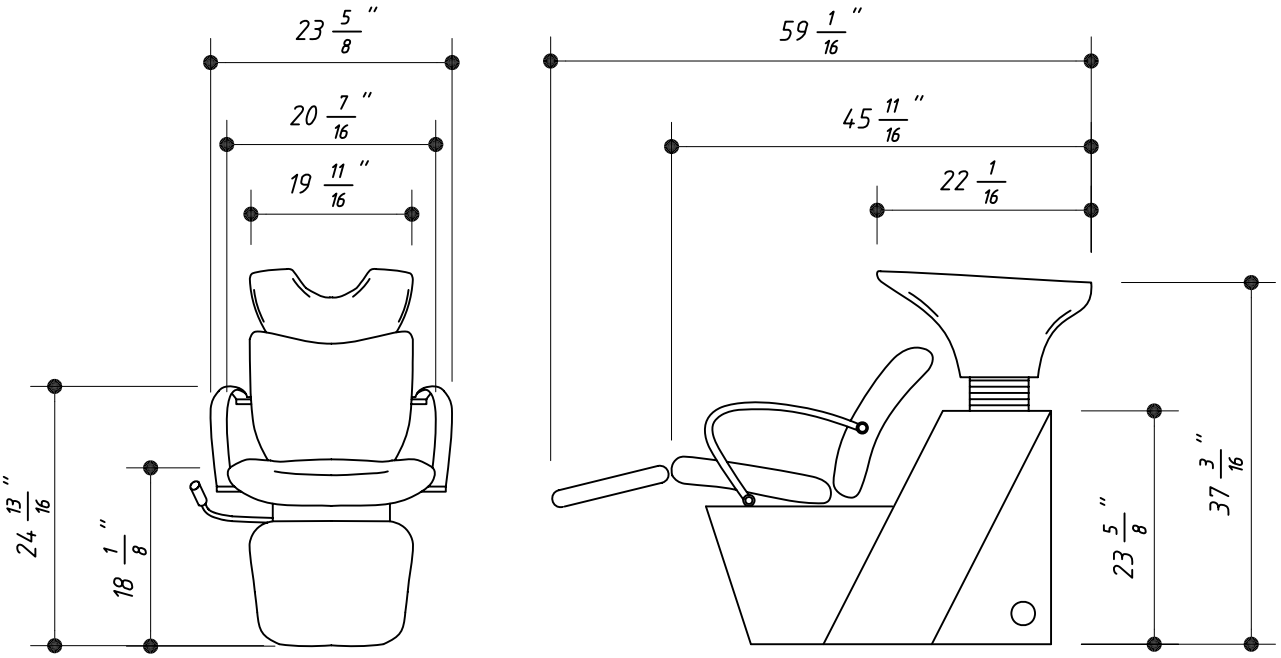
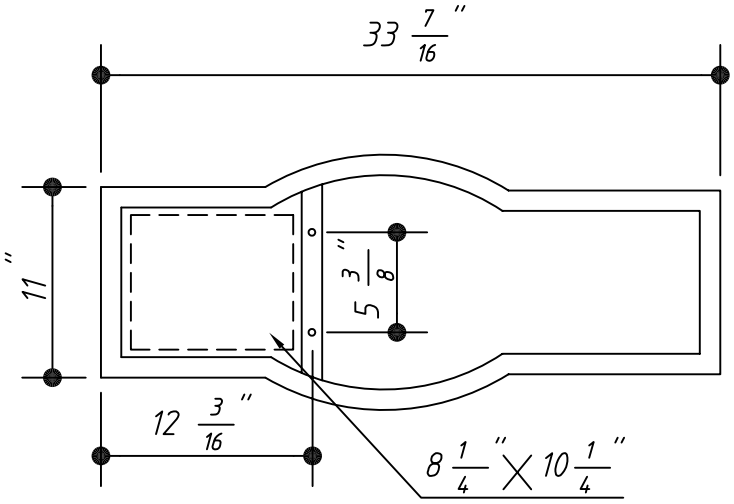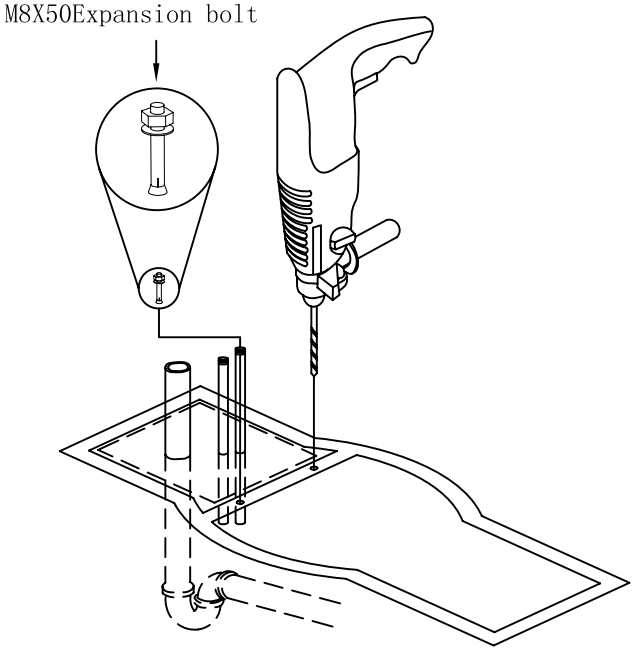
1. Drill 2holes for Expansion bolt provided.
2. Insert Expansion bolt into the holes, see Note about fastener on Instruction