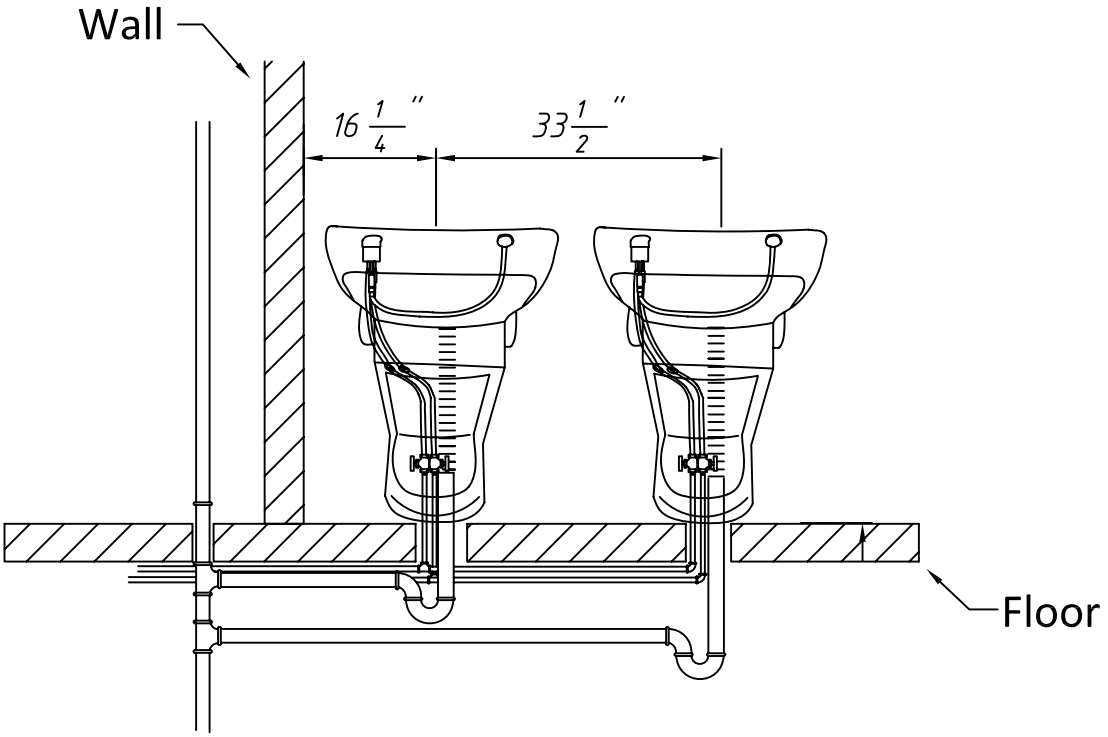
Wall
16 1/4 "
33 1/2 "
Floor

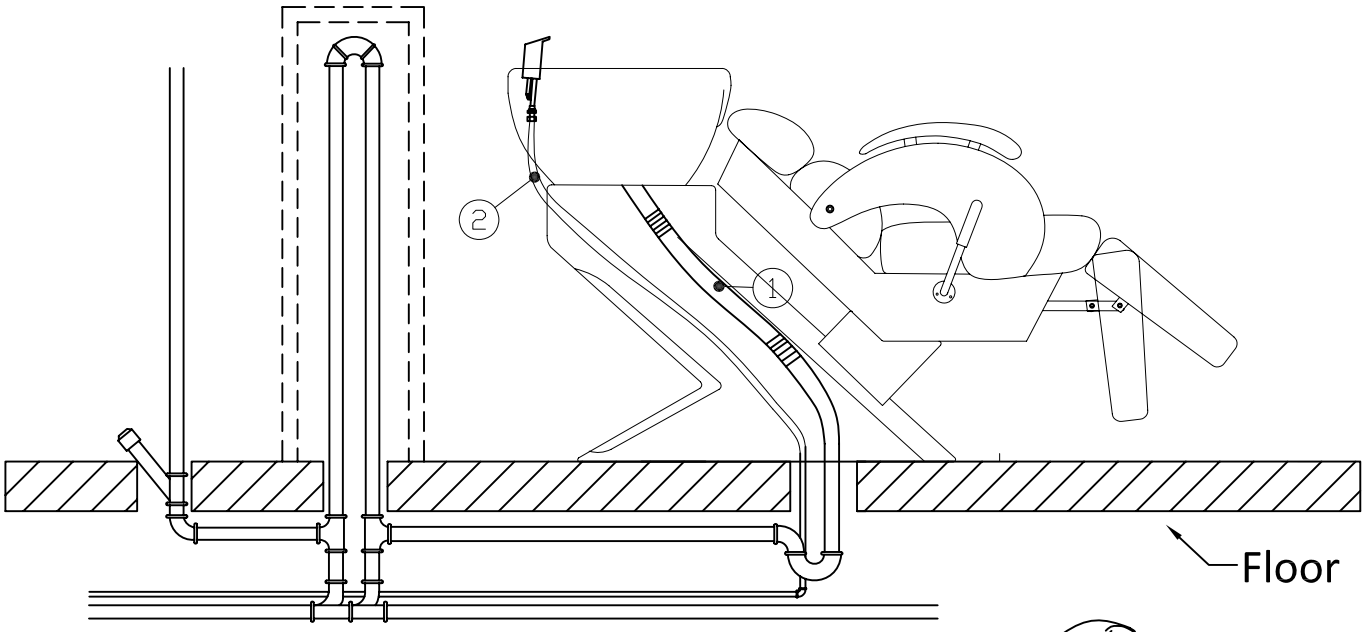
2
1
Floor

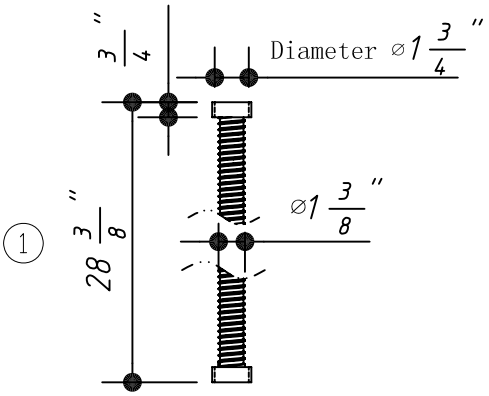
3/4 "
Diameter ⌀1 3/4 "
⌀1 3/8 "
1
28 3/8 "

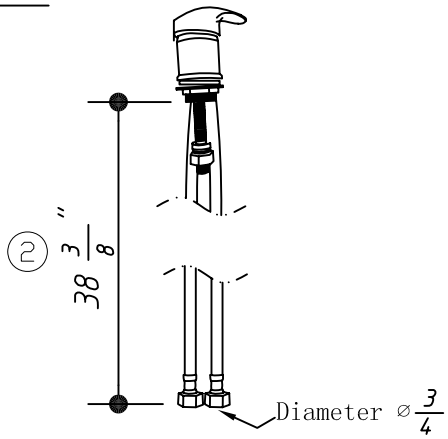
2
38 3/8 "
Diameter ⌀ 3/4