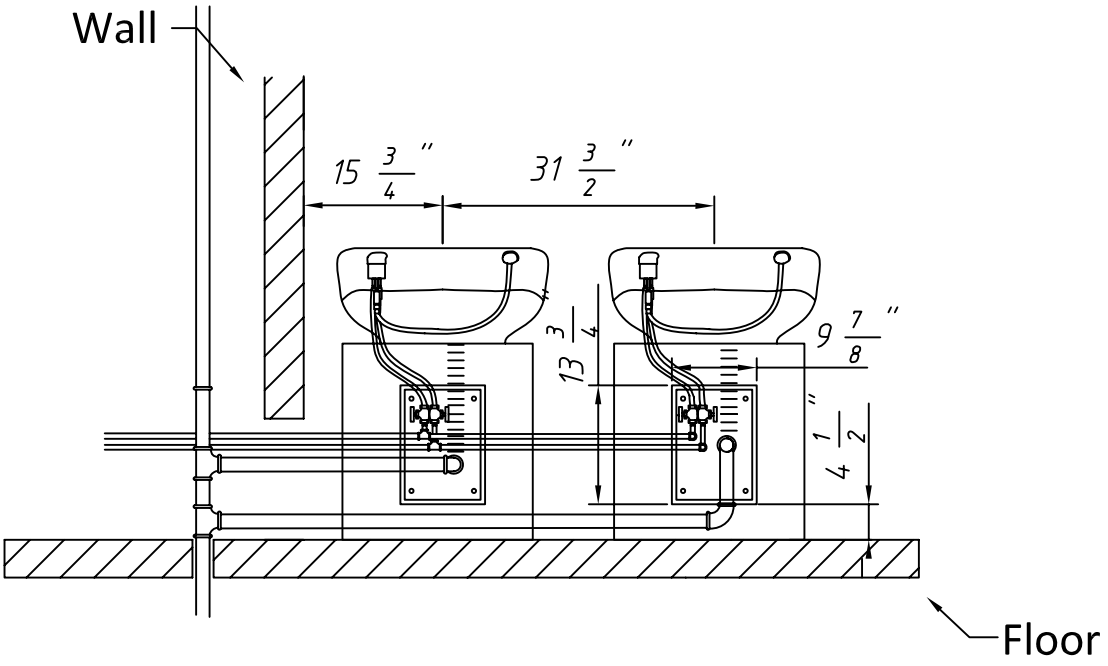

Wate pipe installation B.
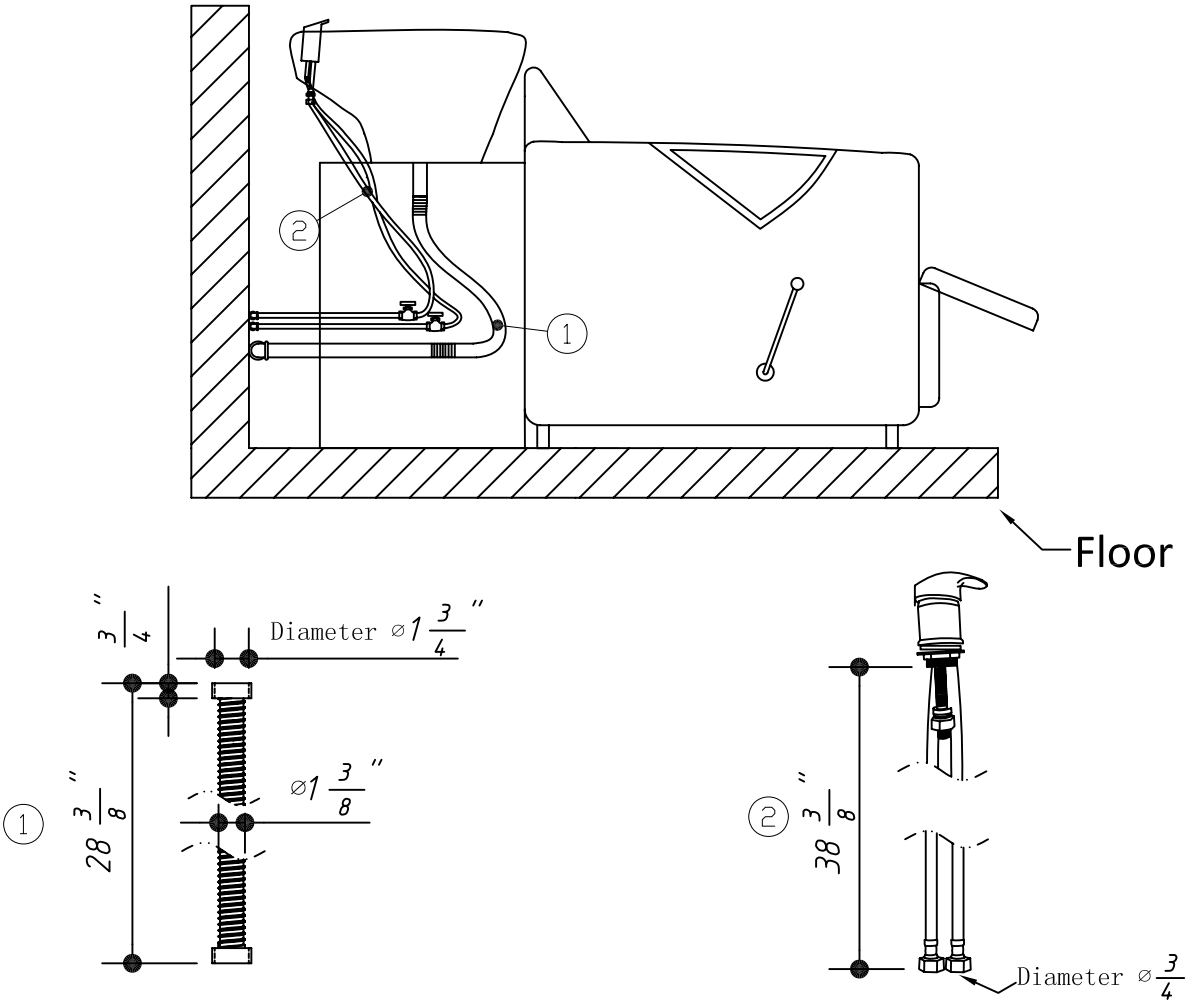
Wate pipes go out the back door of shampoo base.