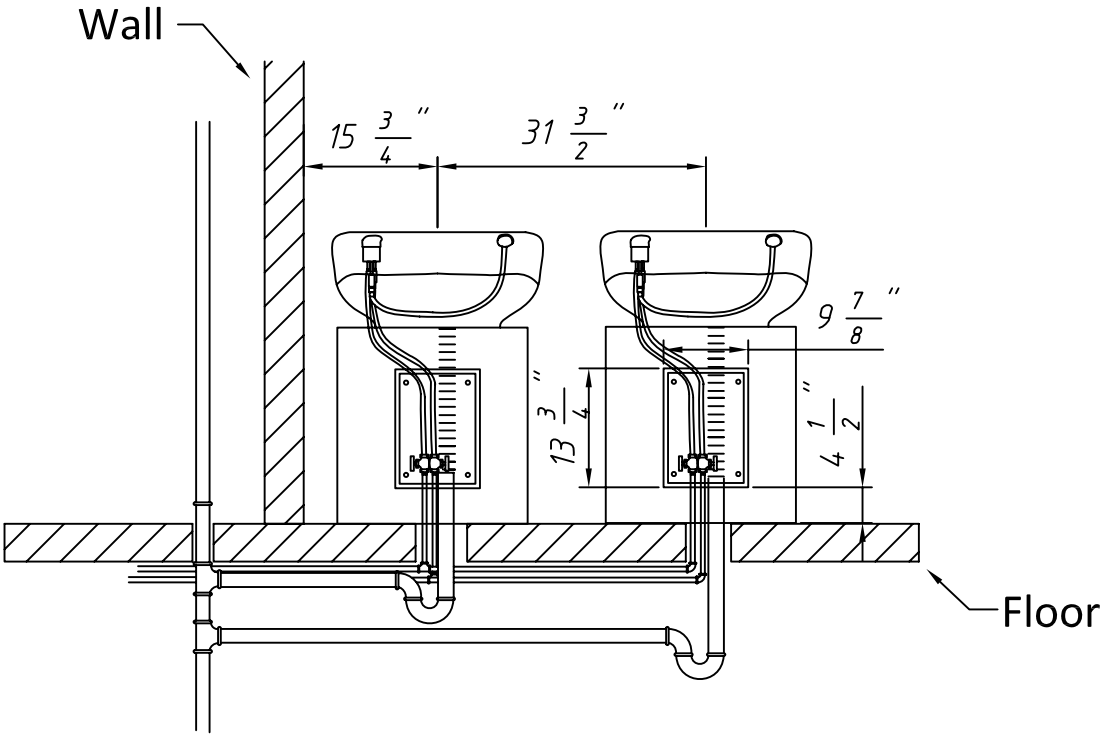

Water pipe installation A.
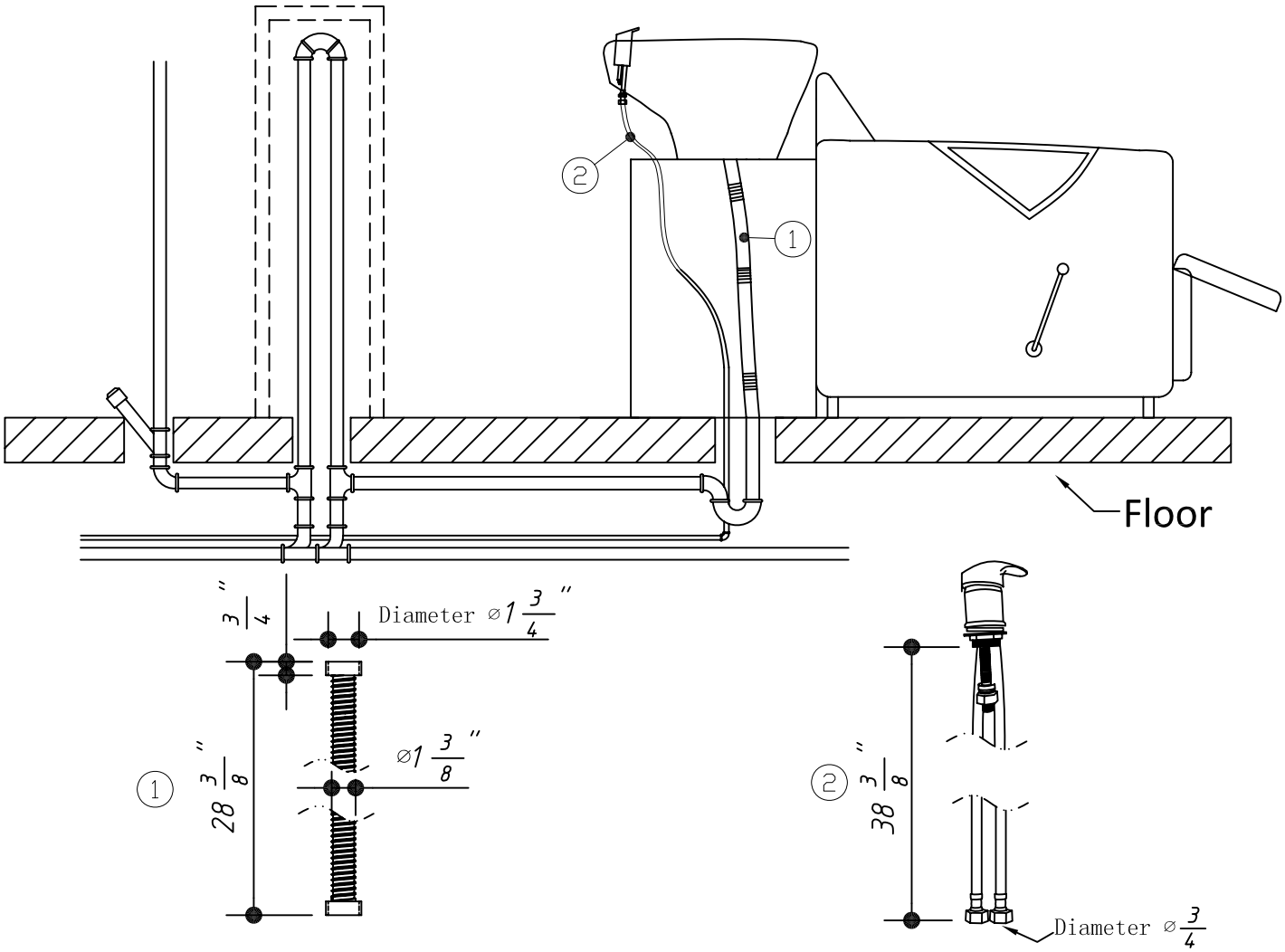
Water pipes go all the way inside shampoo base.